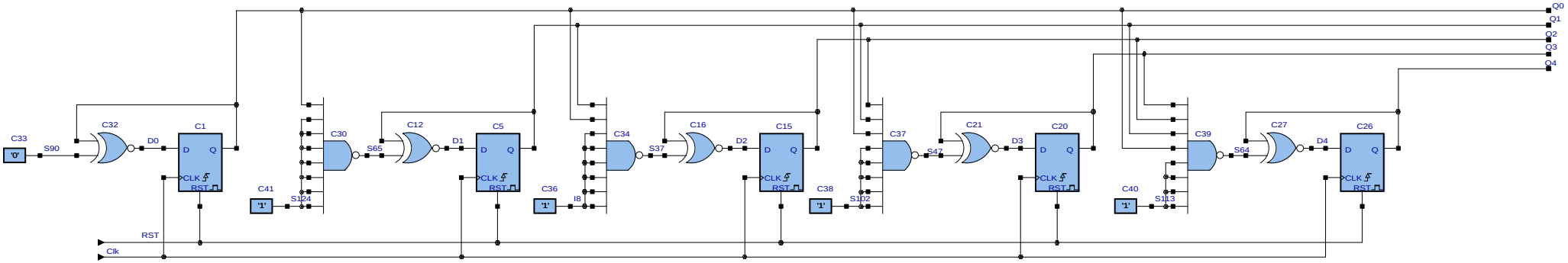
C33
'0'
S90
C32
D0
C1
D
Q
CLK
RST
C41
'1'
S124
C30
S65
C12
D1
C5
D
Q
CLK
RST
C36
'1'
I8
C34
S37
C16
D2
C15
D
Q
CLK
RST
C38
'1'
S102
C37
S47
C21
D3
C20
D
Q
CLK
RST
C40
'1'
S113
C39
S64
C27
D4
C26
D
Q
CLK
RST
RST
Clk
Q0
Q1
Q2
Q3
Q4